Adhesive Simulation and Measurements

- The Coupled Simulation Process
- The UMAT Subroutine in ABAQUS
- From Measurements to Simulation Model
- Automotive Simulations and Validations

Author: Dr. Stefan Paulke

The Coupled Simulation Process

Input: Temperature Measurement (during the paint drying oven)

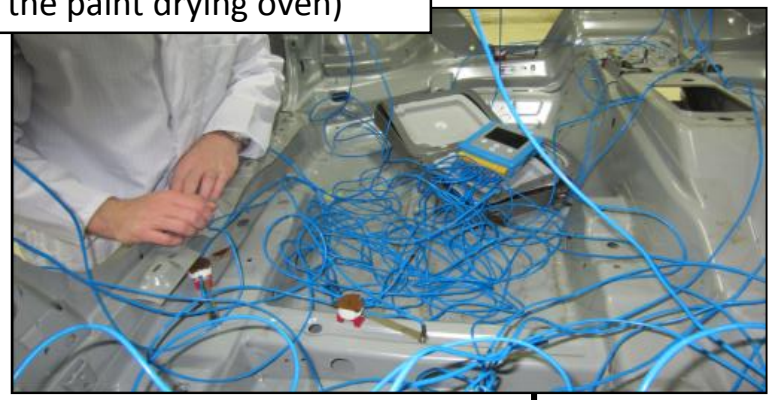

Input: Crash FE Model (containing connections e.g. adhesives)

THESEUS-FE Oven
Thermal Simulation

Body in White Model/Mesh

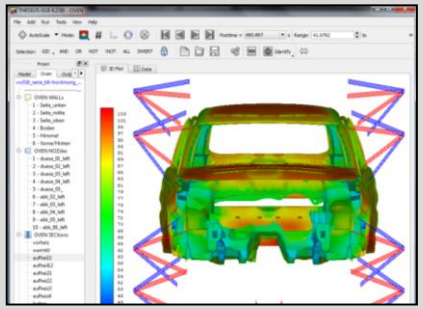

Calibration of THESEUS-FE Oven Model

Output:
Temperatures: T(t)

ABAQUS/UMAT
Mechanical Simulation

Body in White Model/Mesh

UMAT for Adhesives:

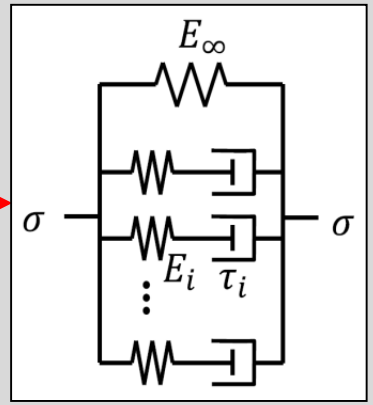

Output:
- *Deformations: u(t)*
- *Stresses: σ(t)*

The UMAT Subroutine in ABAQUS

Deformations $\boldsymbol{\varepsilon} = \boldsymbol{\varepsilon}^{visco\ elast.} + \boldsymbol{\varepsilon}^{plast.} + \boldsymbol{\varepsilon}^{therm.exp.} - \boldsymbol{\varepsilon}^{curing\ shrink}$

Adhesive

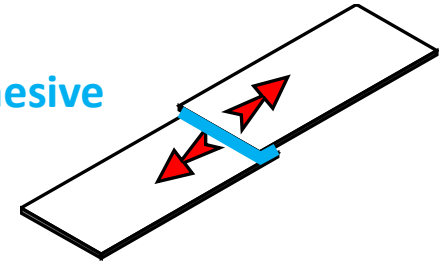

UMAT* for Adhesives

Input:

- *Strains* $\boldsymbol{\varepsilon} = [\varepsilon_{11}, \varepsilon_{22}, \dots, \varepsilon_{23}]$
- *Temperatures*
- *State variables*

Output:

- *Adhesive curing level: p[0..1]*
- *Stresses* $\boldsymbol{\sigma} = [\sigma_{11}, \sigma_{22}, \dots, \sigma_{23}]$

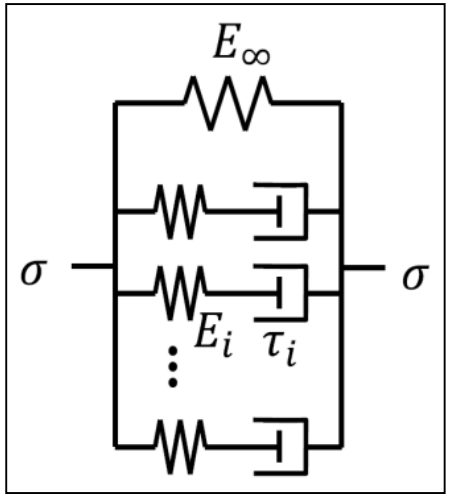

https://www.3ds.com/products-services/simulia/products/abaqus/

* UMAT = User defined subroutine for special materials in ABAQUS

From Measurements to Simulation Model

(for Adhesive: *Betamate 1480*)

From DMA Measurements to Simulation Model (for BM 1480)

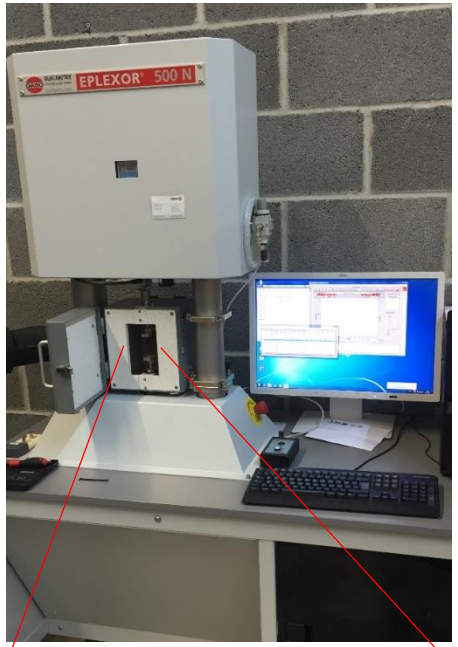

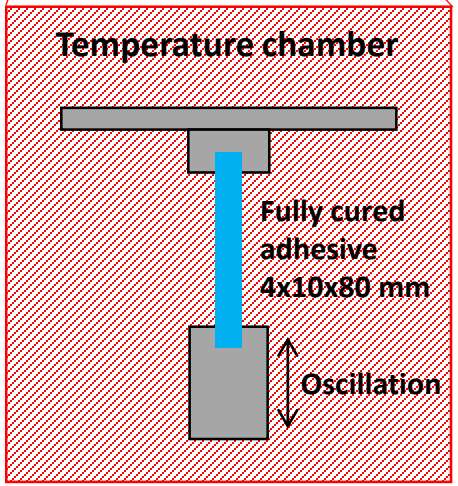

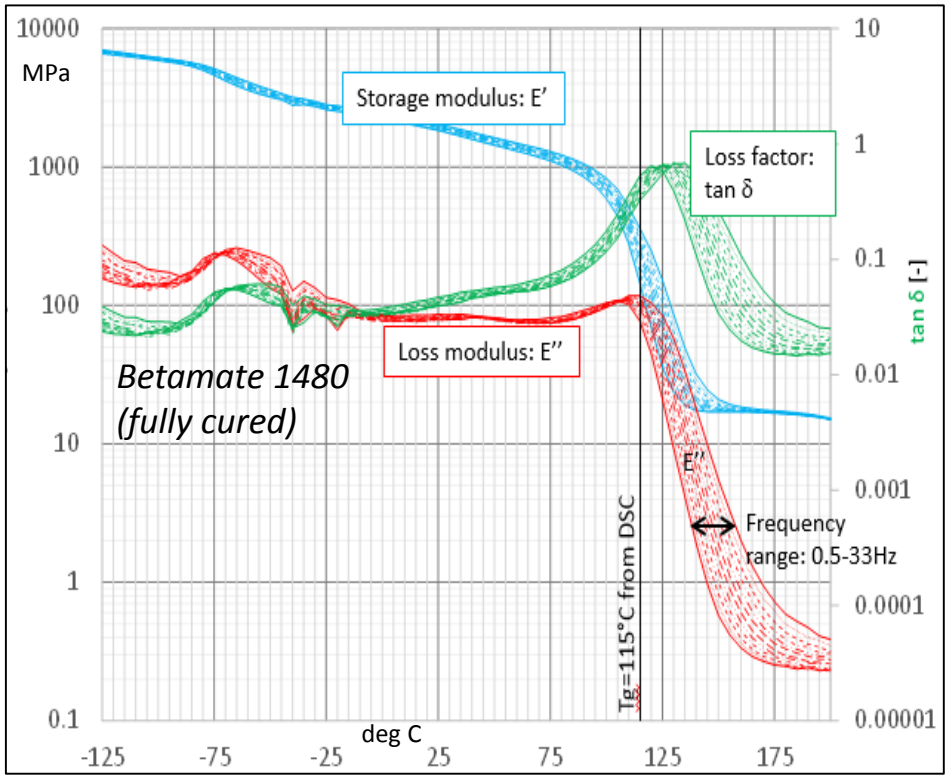

DMA = Dynamic Mechanical Analysis

Maxwell Model

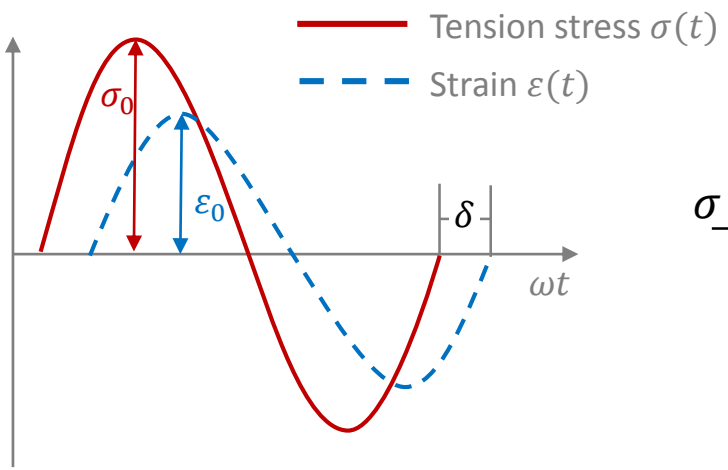

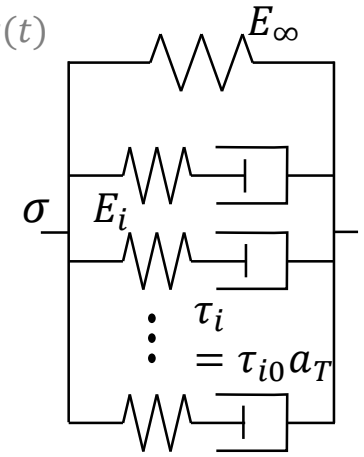

$$E^* = \frac{\sigma(t)}{\varepsilon(t)} = \frac{\sigma_0}{\varepsilon_0}\frac{e^{i\omega t}}{e^{i(\omega t-\delta)}} = \frac{\sigma_0}{\varepsilon_0}e^{i\delta} = \underbrace{\frac{\sigma_0}{\varepsilon_0}\cos\delta}_{E'} + i\underbrace{\frac{\sigma_0}{\varepsilon_0}\sin\delta}_{E''}$$

E^*: complex modulus E': storage modulus E'': loss modulus

$\tan\delta$: loss factor $= \frac{E''}{E'}$

$\omega = 2\pi f$

From DMA Measurements to Simulation Model (for BM 1480)

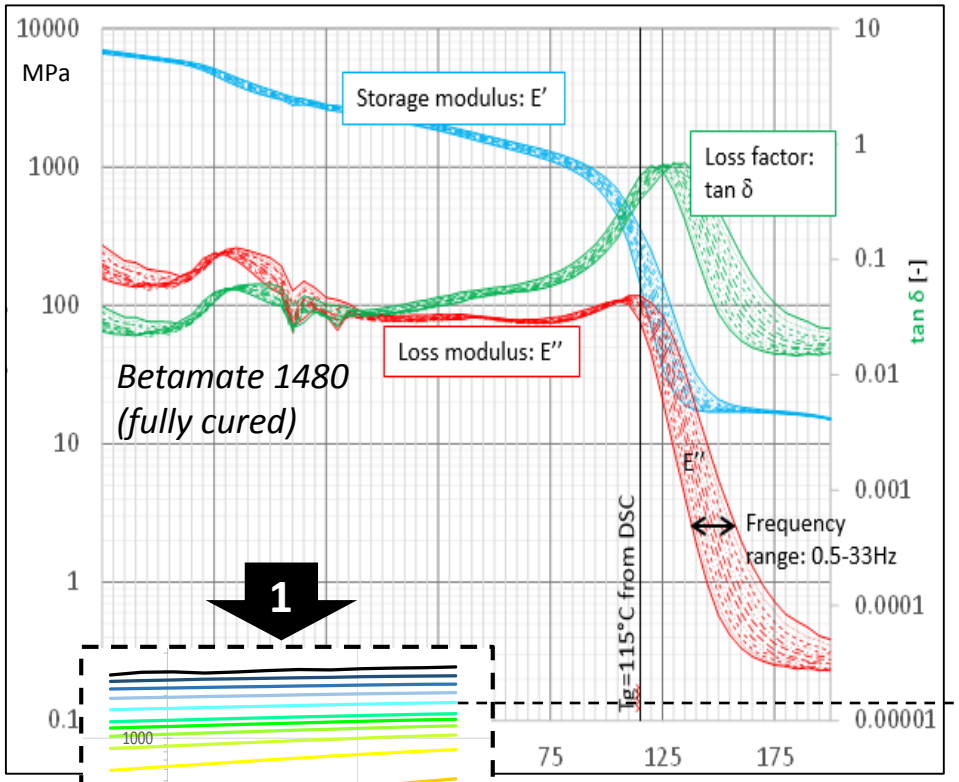

1

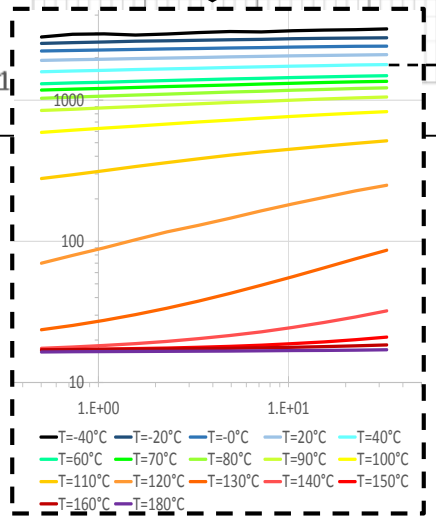

Measured Storage Modulus:
E' in the frequency domain (0.5-33Hz)

(every curve a different temperature)

Temperature shift $\omega \rightarrow \omega a_T$

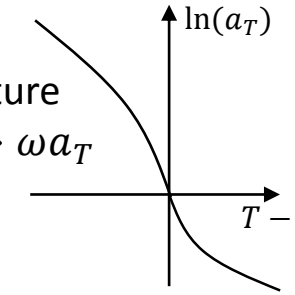

Ref. temp.: $T_0 = T_g = 115°C$ from DSC (see next slide)

2

E' in the time domain

Maxwell Model

Relaxation function at ref temp. T_0

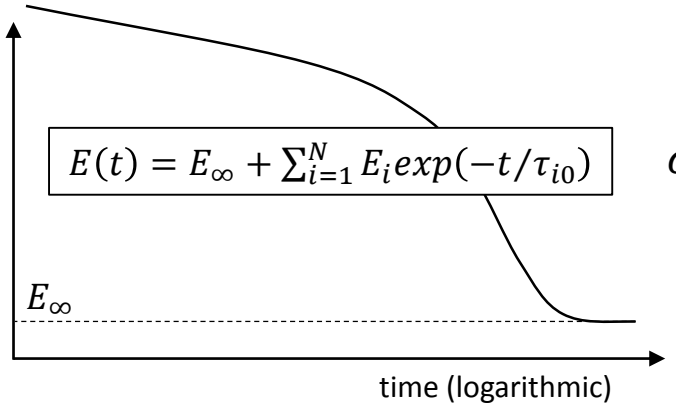

$$E(t) = E_\infty + \sum_{i=1}^{N} E_i exp(-t/\tau_{i0})$$

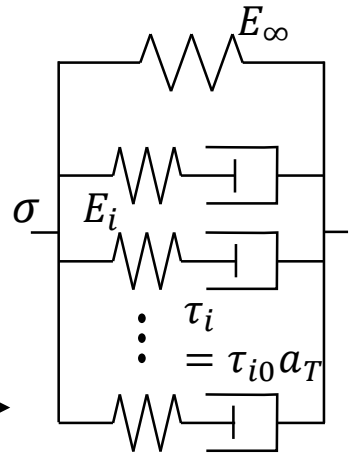

3

E' in the frequency domain (10^{-7}-10^{20}Hz)

Shifted master curve at ref. temp. T_0

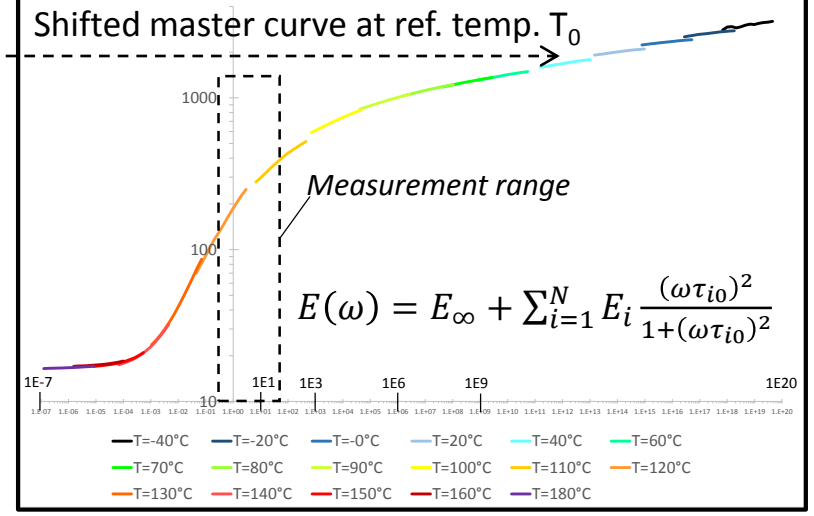

$$E(\omega) = E_\infty + \sum_{i=1}^{N} E_i \frac{(\omega\tau_{i0})^2}{1+(\omega\tau_{i0})^2}$$

From DSC Measurements to Simulation Model (for BM 1480)

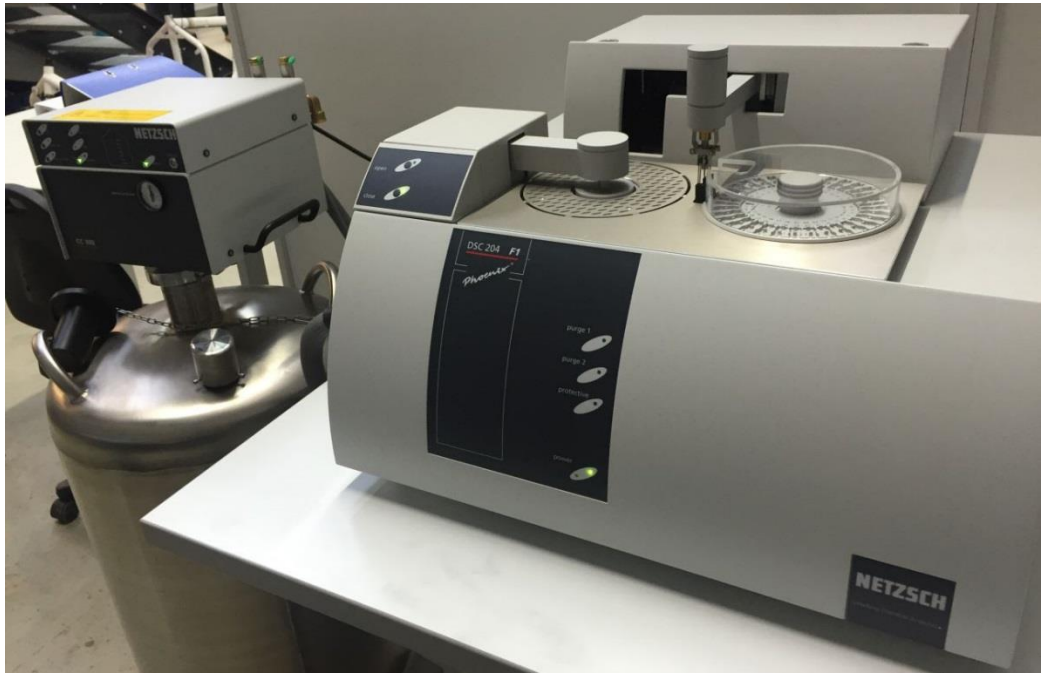

DSC = Differential Scanning Calorimetry

- Used to derive a simulation model for the curing ratio
- Used to measure the glass transition temperature T_g

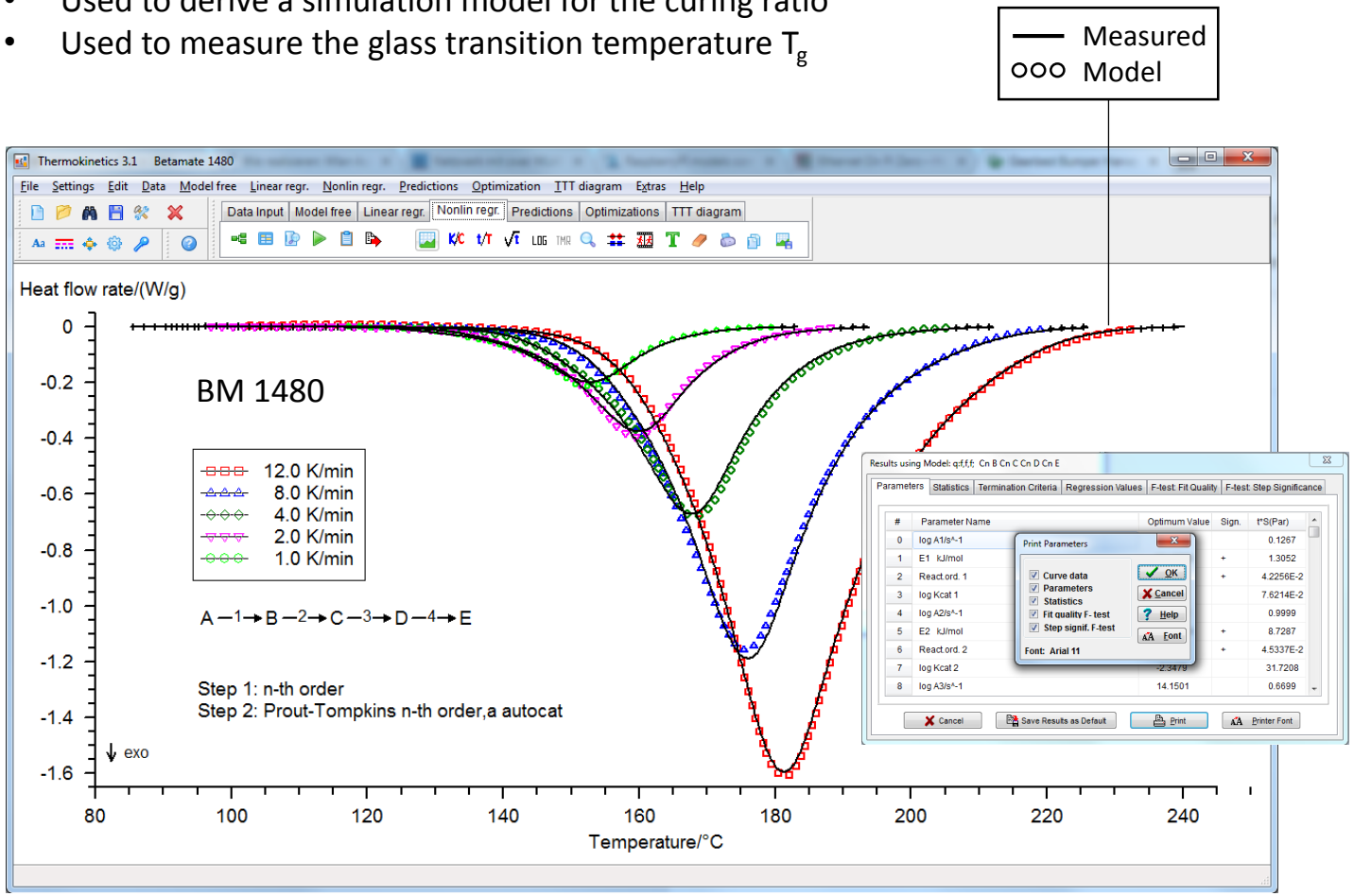

$$\dot{c}_1 = -k_1(1 + k_{cat,1}c_2)c_1^{n_1}$$

$$\dot{c}_2 = k_1(1 + k_{cat,1}c_2)c_1^{n_1} - k_2(1 + k_{cat,2}c_3)c_2^{n_2}$$

$$\dot{c}_3 = k_2(1 + k_{cat,2}c_3)c_2^{n_2} - k_3(1 + k_{cat,3}c_4)c_3^{n_3}$$

$$\dot{c}_4 = k_3(1 + k_{cat,3}c_4)c_3^{n_3} - k_4(1 + k_{cat,4}c_5)c_4^{n_4}$$

$$\dot{c}_5 = k_4(1 + k_{cat,4}c_5)c_4^{n_4}$$

$$c_5 = 1 - c_1 - c_2 - c_3 - c_4$$

Curing ratio: $p = F_1(1 - c_1) + F_2(1 - c_1 - c_2) + F_3(1 - c_1 - c_2 - c_3) + (1 - F_1 - F_2 - F_3)(1 - c_1 - c_2 - c_3 - c_4)$
[0..1]

From Rheometer Measurements to Simulation Model (for BM 1480)

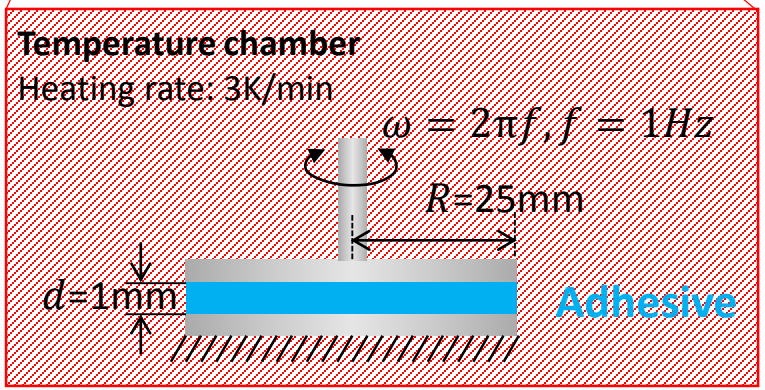

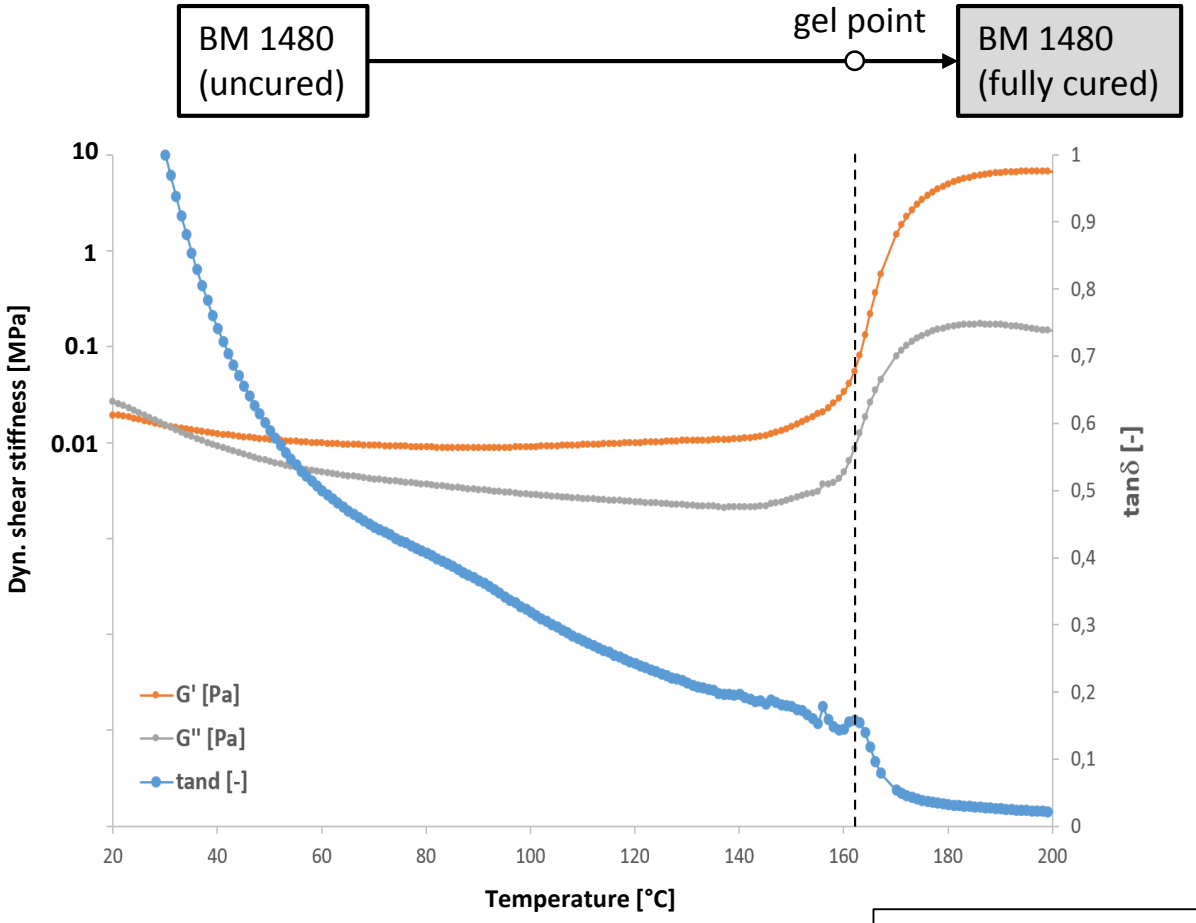

BM 1480 gel point at:

- Temperature 162°C
- Time 47.3 min
- Curing ratio p_{gel}=0.425 (model)

Automotive Simulations and Validations

Automotive Sunroof Submodel

Pre-calculated temperatures: Radiation heating from bottom side

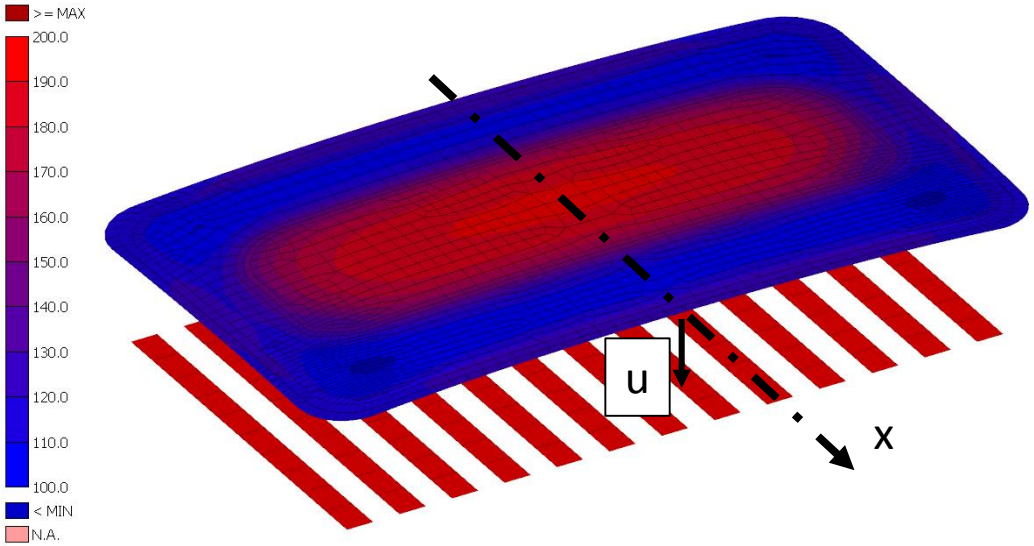

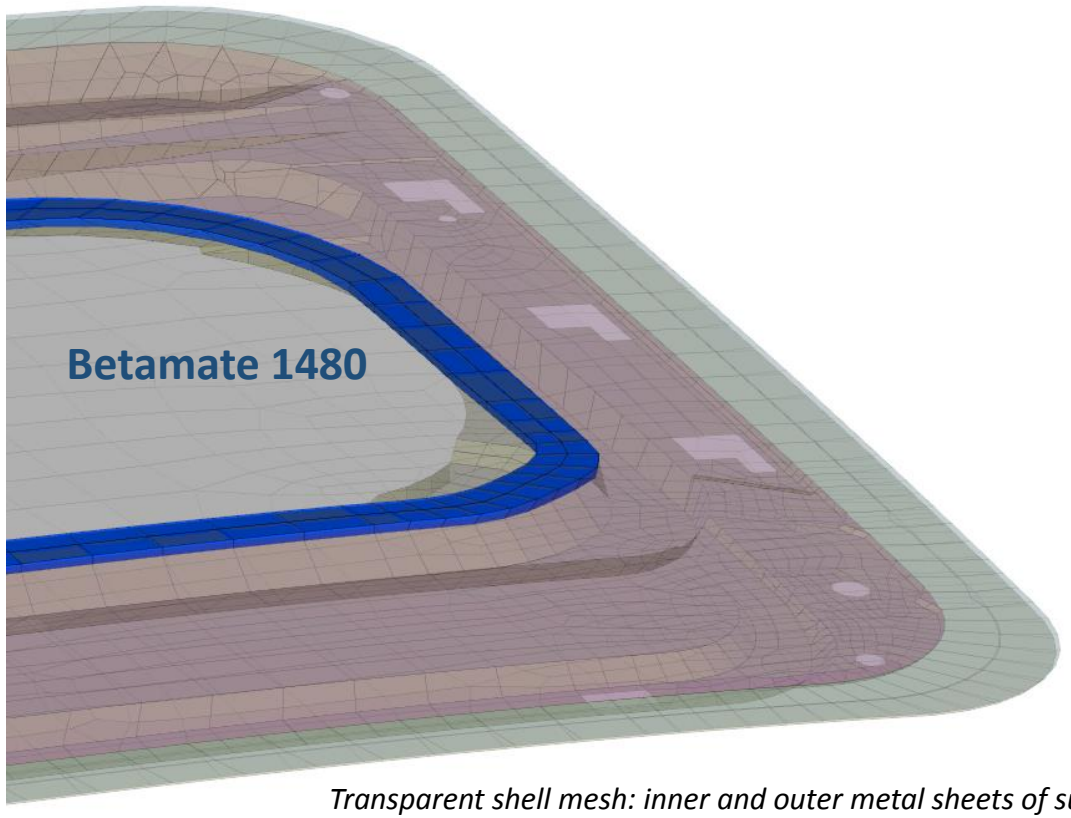

Transparent shell mesh: inner and outer metal sheets of sunroof

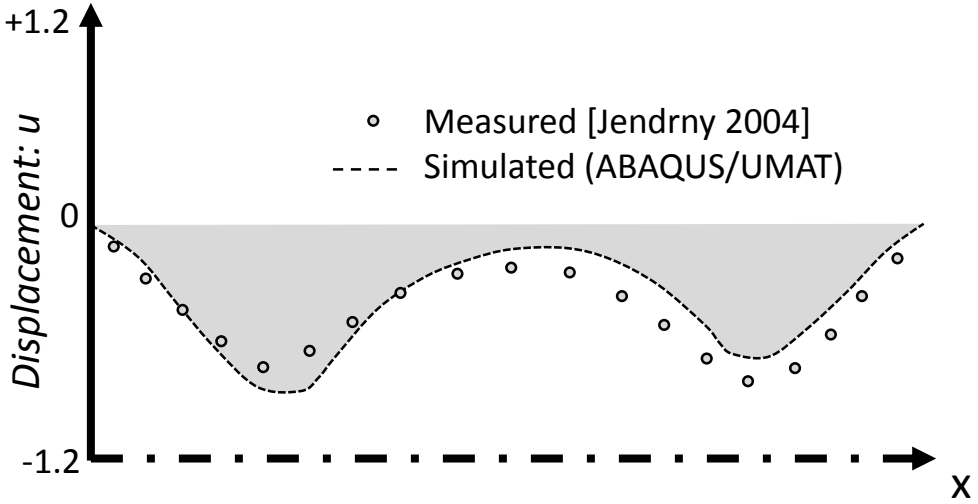

Automotive Body in White

Pre-calculated temperatures: Paint drying oven

Full animation video available…

Automotive Body in White

Finite Element Model (BMW E61, symmetric half model)

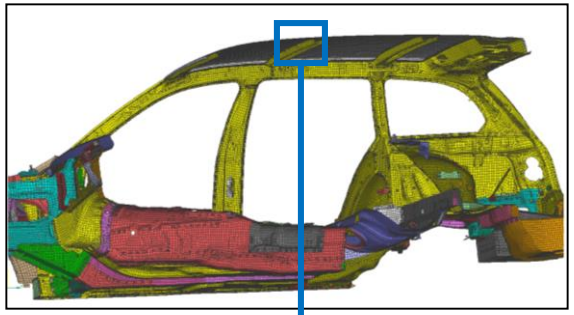

Adhesive:
Totalseal 1198

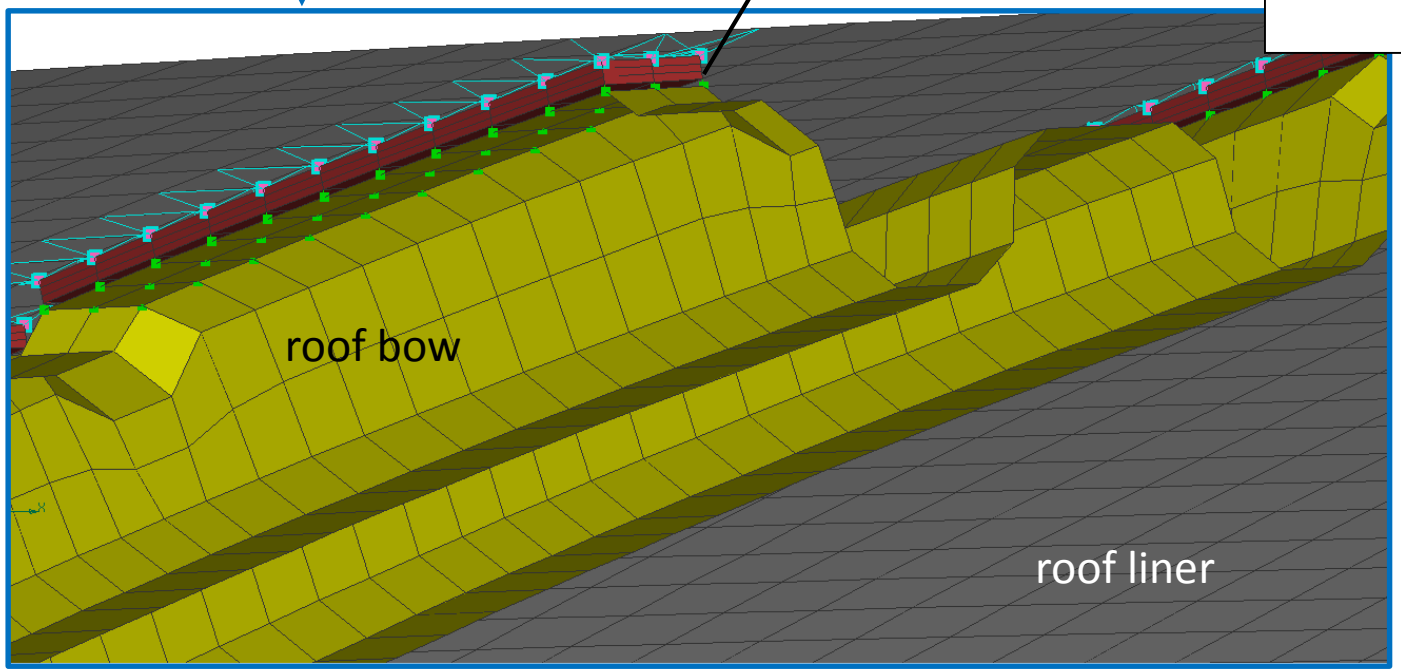

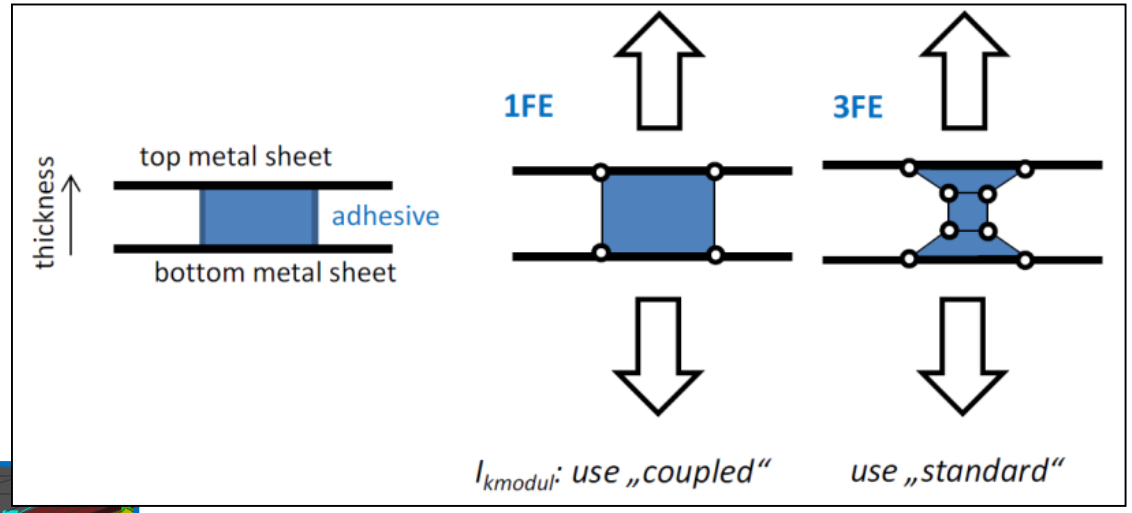

[Eis/Paulke 2006]

Measurements

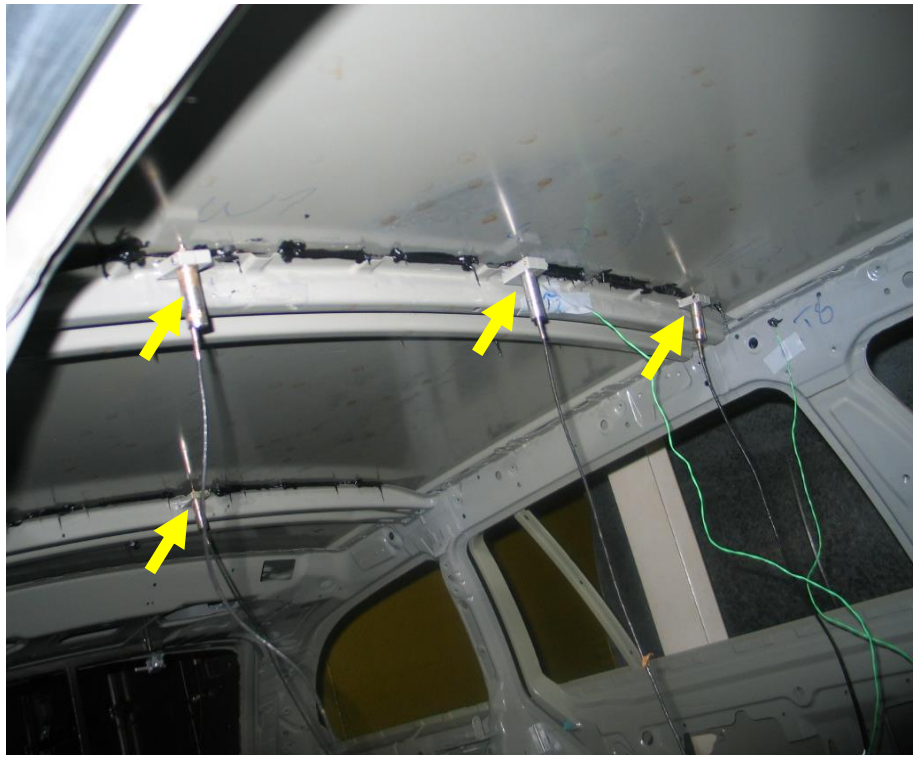

Validation: Temperatures and Relative Displacements